SER. No. 19248

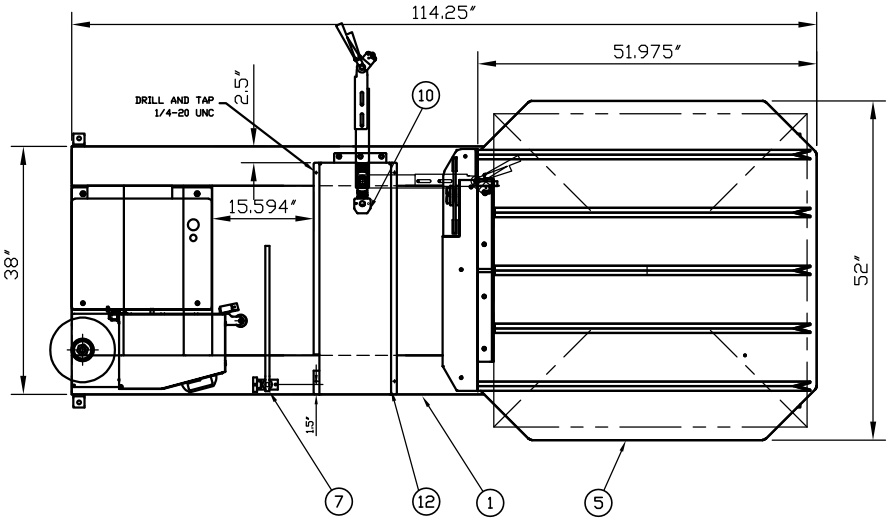


| MATERIAL LIST | | | |
|---|---|---|---|
| ITEM | QTY. | DESCRIPTION | PART No. |
| 1 | 1 | MACHINE BASE & TURNTABLE DRIVE ASSEMBLY | G3200-075-01-00-R0 |
| 2 | 1 | SWITCH SERIES TOWER ASSEMBLY | G2700-050-00-R4 |
| 3 | 1 | PRESTRETCH CARRIAGE 20″ FILM | G2900-184-00-R6 |
| 4 | 1 | CUT & WIPE DEVICE ASSEMBLY | G6900-117-00-R0 |
| 5 | 1 | TURNTABLE WELDMENT 52″x52″ | C6823 |
| 6 | 1 | FILM CLAMP FOR PLATFORM AUTOMATIC (REF. G134) | G5900-044-00-R3 |
| 7 | 1 | ROPING BAR ASSEMBLY | G5700-041-00-R0 |
| 8 | 1 | ANGLE STOPPER 52″ OCATAGONAL TURNTABLE | F6424 |
| 9 | 1 | CONTROL PANEL | T.B.A. |
| 10 | 1 | CONDUIT HOLDER PLATE | F6399 |
| 11 | (1) | WIRELESS LANYARD START SWITCH (NOT SHOWN) | OWRL-LNYRD |
| 12 | 1 | CUT & WIPE AND EL. BOXES GUARD ASSEMBLY | C6841 |
| 13 | (1) | PLATFORM SCALE SW-250 (NOT SHOWN) | Y184 |

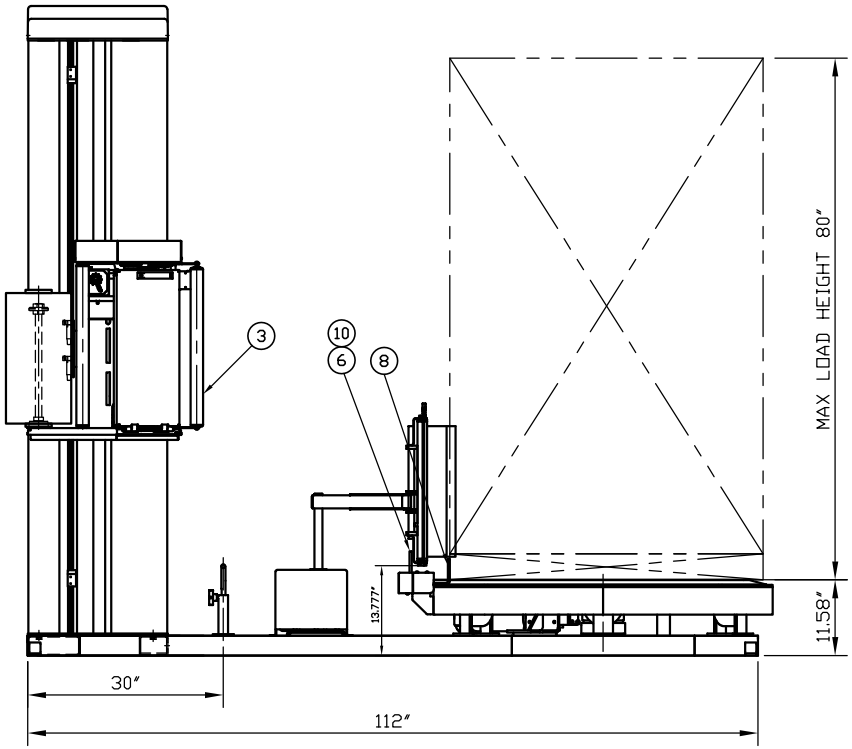


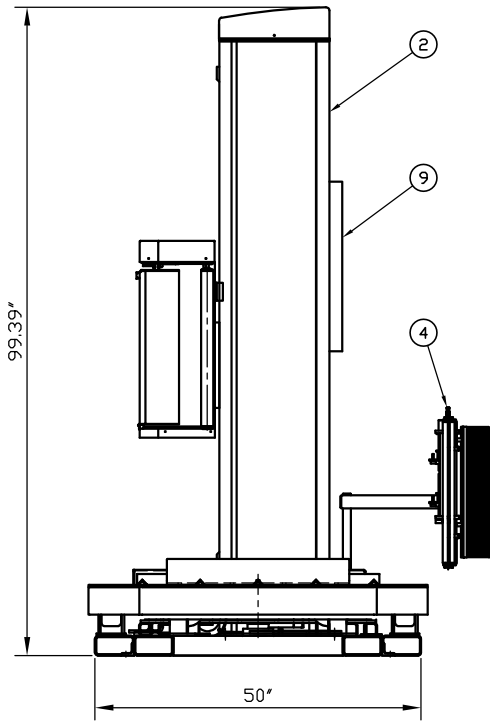


| No. | DESCRIPTION | DATE |
|---|---|---|
| . | . | . |
| . | . | . |
| 0A | ITEM 10 ADDED | 06/12/2025 |

REVISIONS

COUSINS PACKAGING INC.

| | | | |
|---|---|---|---|
| SCALE 1 : 15 | TITLE MODEL HP3200 PLATFORM AUTOMATIC STRETCH WRAP MACHINE - GENERAL ARRANGEMENT | | |
| DATE MAY 5, 2025 | | | |
| DRAWN BY SP | CHECKED BY . | DRAWING NO. G3200-075-00 | SHEET 1 OF 1 / REVISION 0A |