PART No. •

SPECIFICATIONS

CAPACITY: MAXIMUM WEIGHT = 4,000 LBS. DYNAMIC
MAXIMUM LOAD SIZE = 48" W x 48" L x 75" HIGH
MINIMUM LOAD SIZE = 30" W x 30" L x 24" HIGH

PRODUCTION RATE: UP TO 40 LOADS PER HOUR

ELECTRICAL REQUIREMENTS: 208VOLT/3 PHASE + NEUTRAL/60 Hz. 20 AMP SUPPLY REQUIRED

PNEUMATIC REQUIREMENTS: ALL ELECTRIC - NO PNEUMATIC SUPPLY REQUIRED

CONVEYOR DATA: 2-1/2" DIA. ROLLERS ON 3" CENTERS c/w 11/16" HEX AXLES
RATED 4,000 LBS. PER 5 FT. LONG SECTION
CONVEYING SPEED 28 F.P.M.
54" EFFECTIVE WIDTH
16.4" FROM FLOOR TO TOP OF ROLLERS

SERIAL No.: PROPOSAL
INTEGRATOR: TBA
END-USER: TBA
LOCATION: TBA

MATERIAL LIST			
ITEM	QTY.	DESCRIPTION	PART No.
1	1	MACHINE BASE AND TURNTABLE ASSEMBLY	G3300-251-01-00-R0
2	1	TOWER ASSEMBLY FOR 75" WRAP HEIGHT	G2700-050-00-R4
3	1	TURNTABLE CONVEYOR ASSEMBLY	G4900-113-00-R1
4	1	FILM CLAMP ASSEMBLY	G5900-019-00-R5
5	1	RAPID THREAD CARRIAGE ASSEMBLY	G2900-115-00-R7
6	1	FILM CUT/WIPE ARM ASSEMBLY	G6900-039-00-R2
7	REF.	CONTROL PANEL MOUNTING FRAME	C3983-R2
8	1	ROPING ROLLER ASSEMBLY	G5700-023
9	1	CONTROL PANEL	E3300-TBA
10	1	FILM CUT/WIPE DEVICE COVER GUARD	C1309
11	1	PINCH POINT GUARD	C1373
12	1	SAFETY FENCE ASSEMBLY	G3300-146-23-00

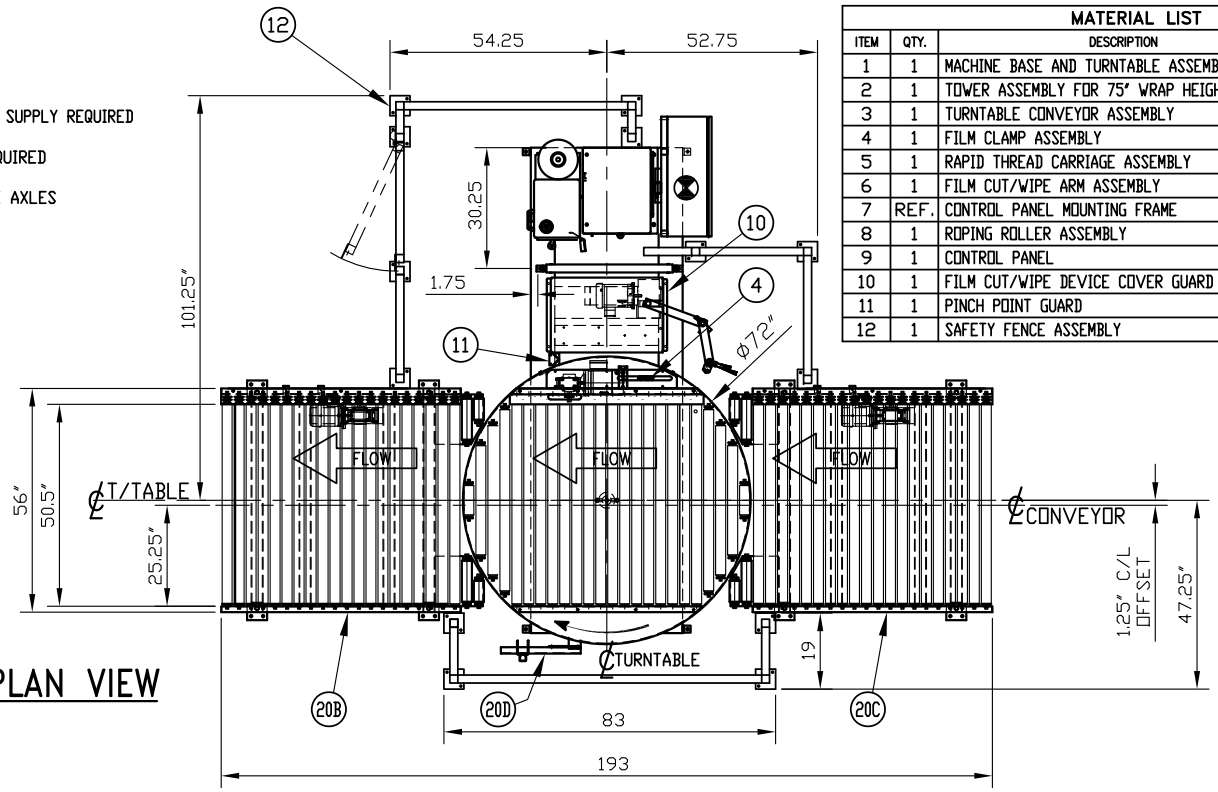

PLAN VIEW

OPTIONAL ITEMS (NOT ALL SHOWN)			
ITEM	QTY.	DESCRIPTION	PART No.
20	1	MACHINE VERSION CTA INCLUDING:	.
A	1	TURNTABLE CONVEYOR CONTOUR ROLLERS BOTH SIDES, LEVEL	.
B	1	OUTFEED CDLR CONVEYOR 5' LONG	G4900-098-00-R3-16
C	1	INFEED CDLR CONVEYOR 5' LONG	G4900-093-00-R3-16
D	1	TURNTABLE LOAD POSITIONING PHOTO-EYE & REFLECTOR	C1542-R3
E	1	INFEED INTERFACE RELAYS c/w PLC LOGIC	.

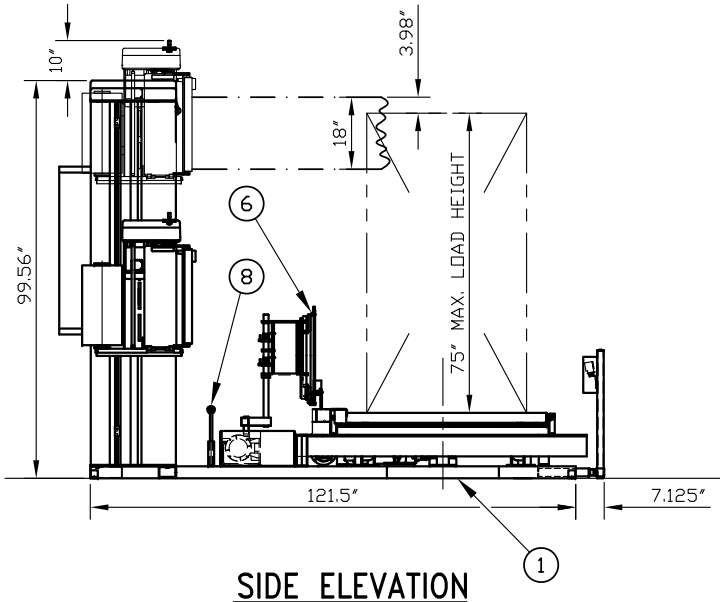

SIDE ELEVATION
(INFEED CONVEYOR AND FENCES NOT SHOWN FOR CLARITY)

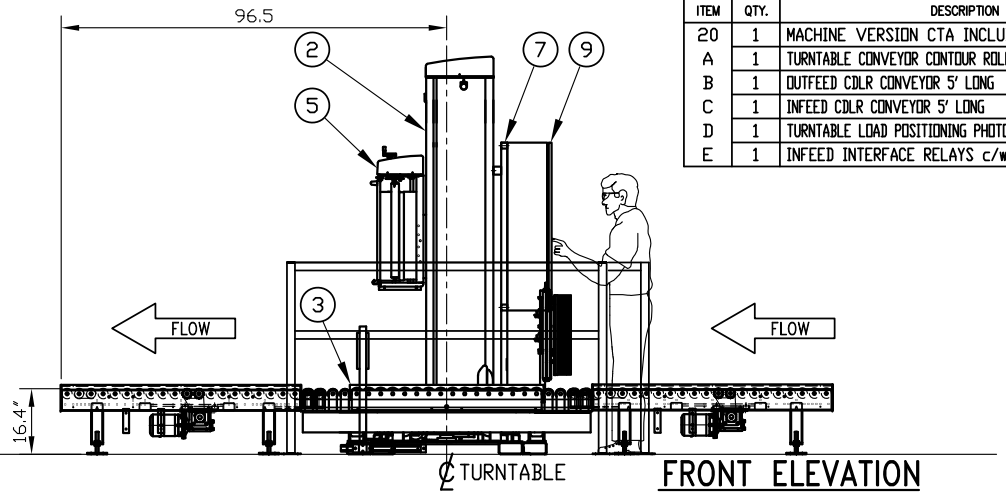

FRONT ELEVATION

No.	DESCRIPTION	DATE
.	.	.

REVISIONS

COUSINS PACKAGING INC.

SCALE 1 : 24		TITLE 3300-CTA CONVEYORIZED PLATFORM AUTOMATIC STRETCH WRAP SYSTEM R-L FLOW GENERAL ARRANGEMENT	
DATE JULY 31, 2020			
DRAWN BY TvL	CHECKED BY .	DRAWING NO. G3300-309-00	SHEET 1 OF 1 / REVISION 0